LTspice and Circuit Simulation

1. Aims and Objectives

The aim of this task is to develop simple models of electrical circuits in the LTspice circuit simulation software, while the objectives are a better understanding of the software and how circuits operate. The general principles used in developing these models can be applied to any future circuit simulation work. This handout aims to give you an understanding of the performance and capabilities of the software.

2. LTspice Scaling Factors

Below is a table of the scaling factors you will need to use for the software. This will become more self-explanatory as you use the software.

LTspice Suffix	Metric Name	English Name	Power of 10	Numeric Value
T	tera	Trillion	10^{12}	1000000000000
G	giga	Billion	10^{9}	1000000000
MEG	mega	Million	10^{6}	1000000
k	kilo	Thousand	10^{3}	1000
m	milli	Thousandth	10^{-3}	0.001
u	micro	Millionth	10^{-6}	0.000001
n	nano	Billionth	10^{-9}	0.000000001
p	pico	Trillionth	10^{-12}	0.000000000001
f	femto	Quadrillionth	10^{-15}	0.000000000000001

3. Developing a Simple Potential Divider Simulation

The following instructions assume you are using LTspice 24.1.1 or later. Within LTspice there are two options to create a new schematic file, either click on the button as shown in Fig. 1 or choose ***'File:New Schematic'***.

Figure 1: New File Button

A grey background should appear, save this file to a suitable place.

For this initial simple model, we are going to create a simple two resistor potential divider. Once finished, the schematic should look like Fig. 2.

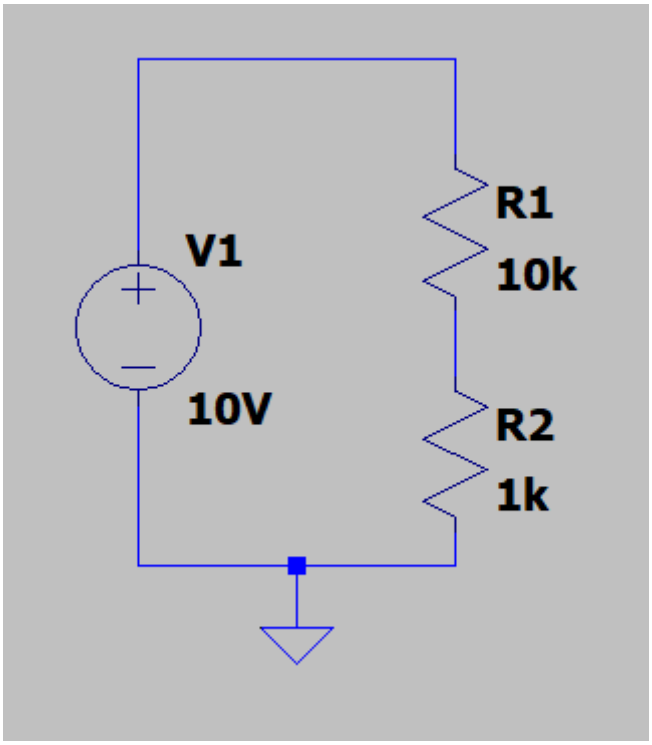

Figure 2: Potential Divider Circuit

To add 2 resistors to the schematic, click on the ***'Resistor'*** symbol as shown in Fig. 3 and add two resistors to the schematic. Each left click will add a resistor, to exit adding resistors right click on your mouse.

Figure 3: Select a Resistor

To alter the value of the resistors, place you mouse over the resistors, an arrow hand should appear and then right click. The options shown in Fig. 4 should appear where you can change the resistance, tolerance, and power rating of the component.

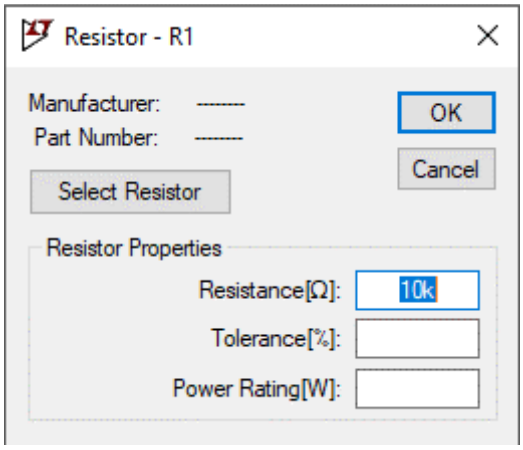

Figure 4: Resistor Options

For the upper resistor choose 10,000 Ω. You can either write ***'10000'*** in the highlighted area or the shortcut ***'10k'***. The lower resistor is 1000 Ω. I'll let you set this value.

To add a voltage source, click on the ***'Voltage Source'*** button (Fig. 5).

Figure 5: Select a Voltage Source

To change the value of the voltage, right click and set the ***'DC value'*** to ***'10V'*** as shown in Fig. 6. We will look at the **'Advanced'** options later.

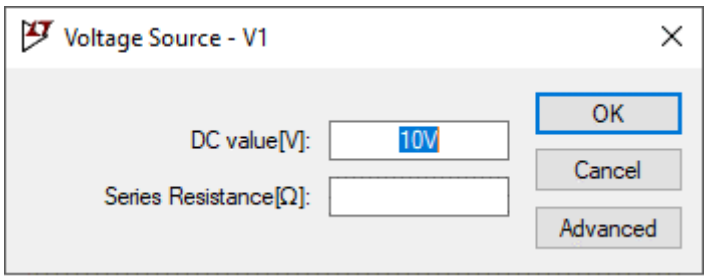

Figure 6: Setting Voltage Source

We finally need to add a ***'Ground'*** reference. To do this click on the ***'Ground'*** button highlighted in Fig. 7.

Figure 7: Ground Reference

To join all of the component together use the ***'Wire'*** button (Fig. 8).

Figure 8: Wire Button

Left clicking starts the wires, left clicking again allows you to change direction, and connecting components together or right clicking exits the wire connection mode.

To delete any wires, click on the ***'Delete'*** button as shown in Fig. 9. A pair of scissors will appear.

Figure 9: Cut / Delete Button

To move and drag any items use the ***'Move'*** and ***'Stretch'*** buttons as shown in Fig. 10. The ***'Move'*** button moves a single component or track. The ***'Stretch'*** button allows you to move combined tracks. Left click on the item to select and move it, right click to drop it

Figure 10: Move and Stretch Buttons

Once the connections and parameters are correct you can start simulating the system.

4. Simulating the Potential Divider

For the potential divider we have the following equation:

$$v_{out} = \frac{R_2}{R_1 + R_2} v_{in} \tag{1}$$

Where $v_{in} = 10\ V$, $R_1 = 10\ k\Omega$, and $R_2 = 1\ k\Omega$.

Therefore:

$$v_{out} = \frac{1000}{10000 + 1000} \times 10 = 0.9091\ V \tag{2}$$

To check this, we need to run the simulation.

To run the simulation either click on the **'Run'** button as shown in Fig. 11 or choose ***'Simulate: Run'***.

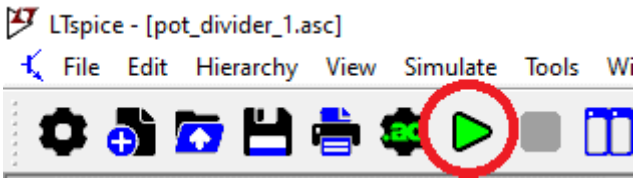

Figure 11: Simulate / Run Button

The simulation command window should then appear (Fig. 12).

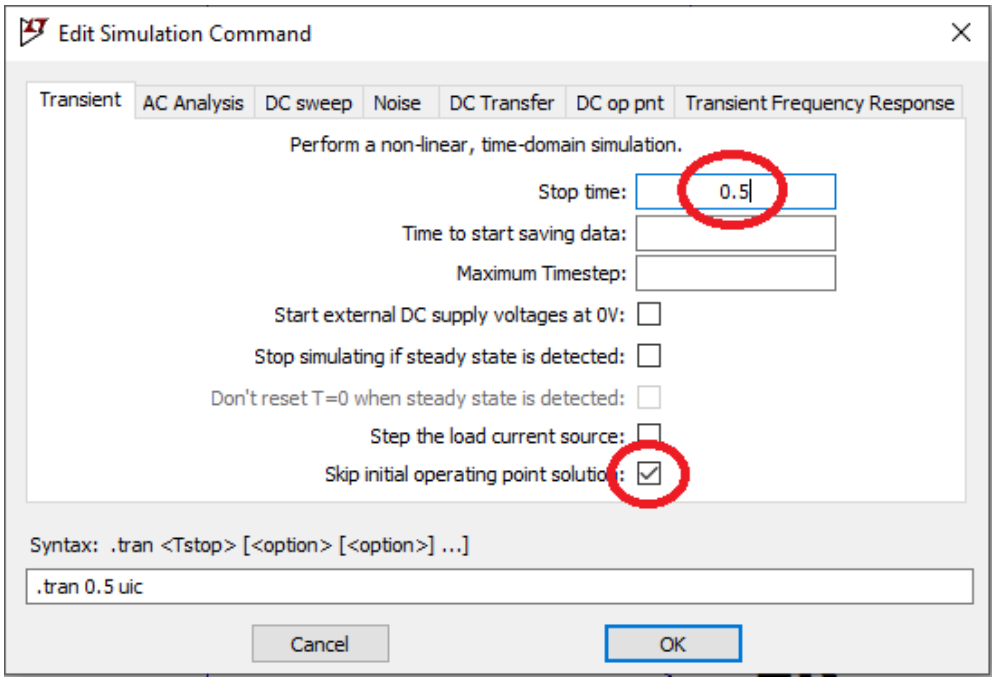

Figure 12: Simulation Command Window

Here we are going to just do a standard ***'Transient'*** analysis. Set the **'Stop time'** to **'0.5'** seconds, and make sure you tick the ***'Skip initial operating point solution'*** option.

When you click OK, the following text (Fig. 13) will appear under your circuit. This is just showing the test condition you have applied.

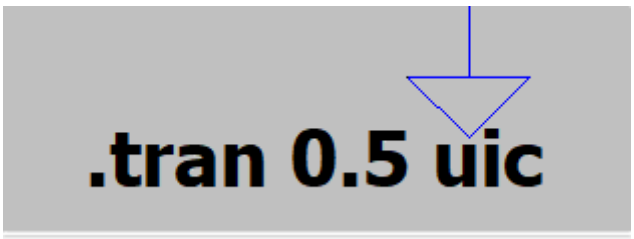

Figure 13: Test Condition Text

If you want to alter the test just right click on the text. If you want to delete the test, right click on the text, press ***'Cancel and Edit Text Directly'***, and then when the following box appears (Fig. 14), delete the text, and press OK. You will also have to do this if two test conditions appear at the same time as it can confuse LTspice.

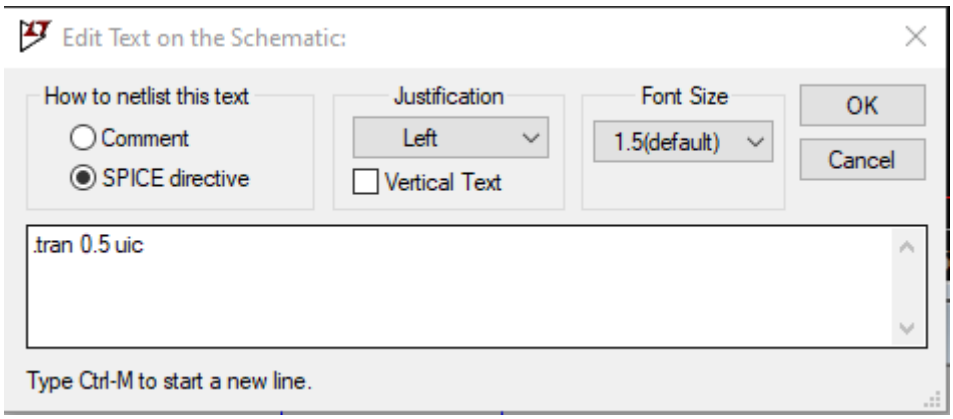

Figure 14: Delete Test Option

When you press OK, a black graph should appear above the schematic.

Let's first add some voltage waveforms. To do this you use the scope probe that should appear when you place your cursor over a connecting line. An example of this is shown in Fig. 15. Click the line to add it to the graph.

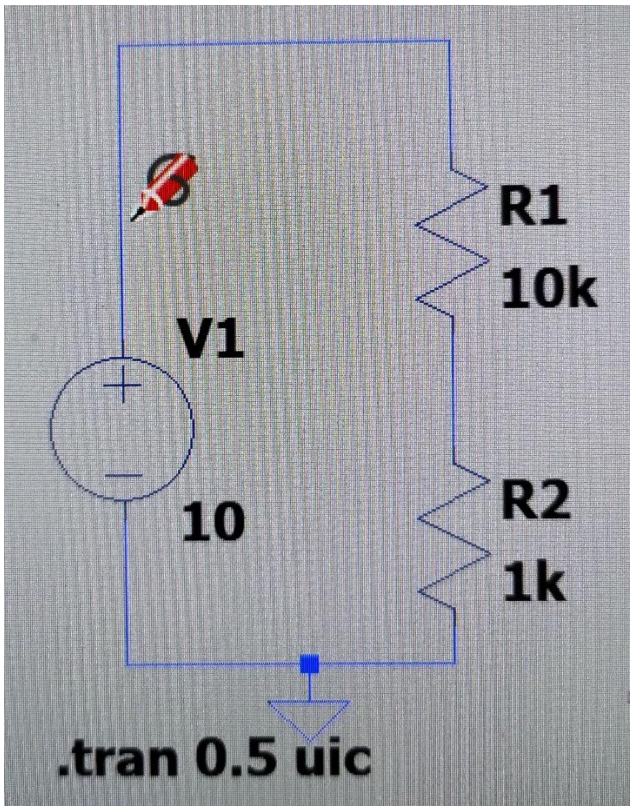

Figure 15: Voltage Measurement Scope Probe

A green line at 10 V should appear. To alter the Y axes to get a better view, place your cursor over the Y axes and it should change to a ruler. Right click and the following block (Fig. 16) should appear. Change the 10 V to 12 V and press OK. You can also do this to the X axes if you want to change this.

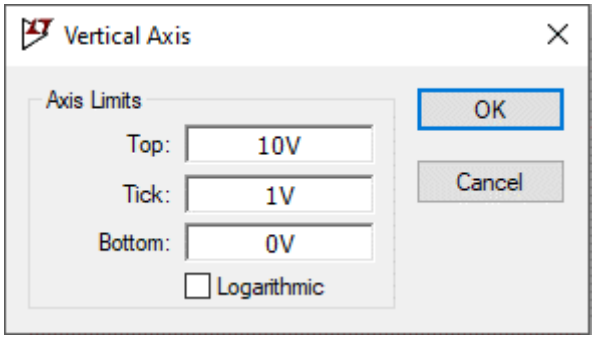

Figure 16: Y Axes Alteration

Then click between the two resistors to add the middle point / output voltage of the potential divider.

You should now have two lines on the graph – one green and one blue.

Let's look at the 10 V signal first, this should be called something like ***'V(n001)'***. Right click on this and the ***'Expression Editor'*** (Fig. 17) should appear. This allows you to change the line colour and you can also add a cursor to this signal. Click on ***'Attached Cursor'*** and select ***'1st'***. Notice that there is also a ***'Delete this Trace'*** option, we will use this later. Press OK.

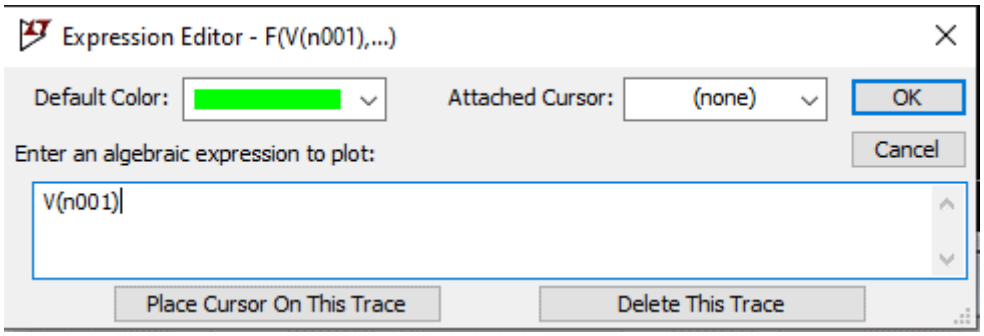

Figure 17: Signal Expression Editor

A display showing the X and Y values should appear (Fig. 18). The X axis is the time point on the graph, and the Y axis is the voltage.

This display shows that the voltage is 10 V, the same as the input.

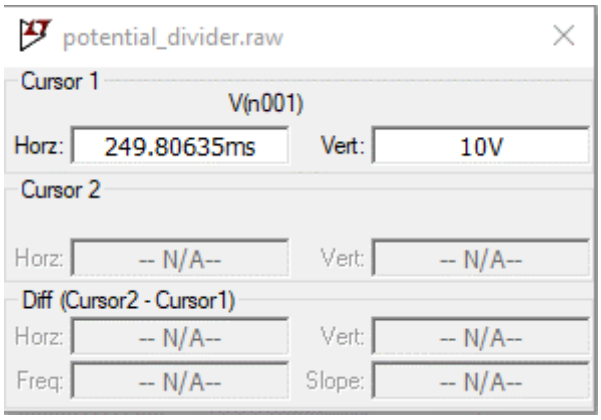

Figure 18: Signal Measurement Display

If you place your cursor over the dotted vertical line on the graph a yellow ***'1'*** should appear. You can drag this to alter the X position of the cursor.

If you do a similar method for the blue line (***'V(n002)'***) and set the ***'Attached Cursor'*** to ***'2nd'*** another cursor will appear (yellow ***'2'***). This may be behind the first cursor, and you should have two sets of data displayed as shown in Fig. 19.

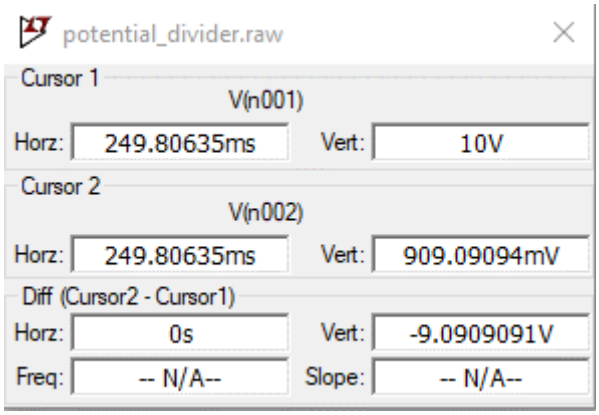

Figure 19: Two Signal Measurement Display

The second voltage of 909.09 mV matches the calculation of the potential divider and proves the simulation.

You can also look at the current flowing in the circuit. Firstly, remove the two voltage waveforms – remember the ***'Delete this Trace'*** option from earlier. To add a current measurement, place the cursor over the component whose current you wish to measure. In this simulation just place the cursor over a resistor as shown in Fig. 20, a current sensor symbol should appear. Left click on this to add the graph.

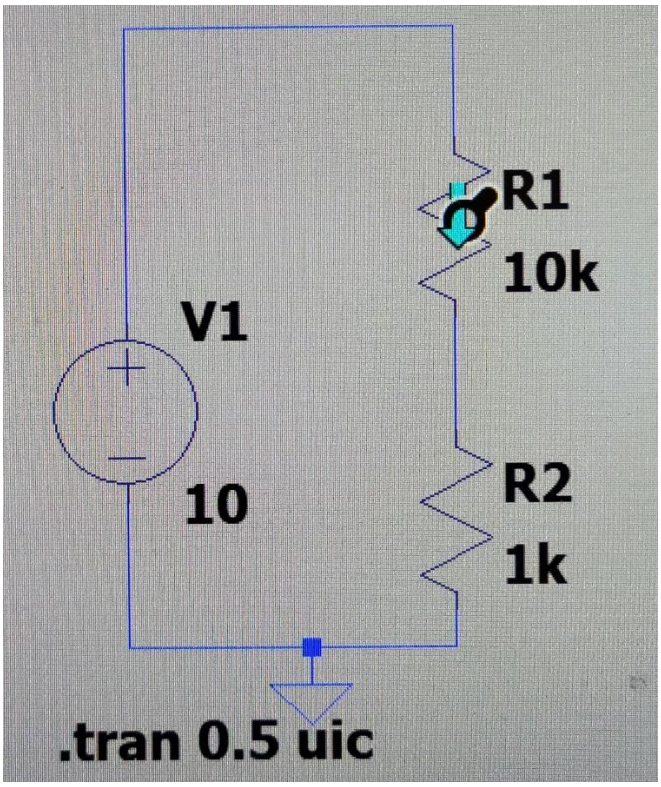

Figure 20: Current Measurement

The current value should appear on the left-hand side axes. If you look at both currents and voltages on the same graph, you will find that the voltage axes goes on the left hand side and the current on the right.

You can do a similar method to measure the current as for the voltage. Is the value correct?

5. Net Labels / Tags

To simplify circuit diagrams, Net Labels or Net Tags are often used to establish nodal connections around the schematic. An example of this is shown in Fig. 21 for the potential divider circuit.

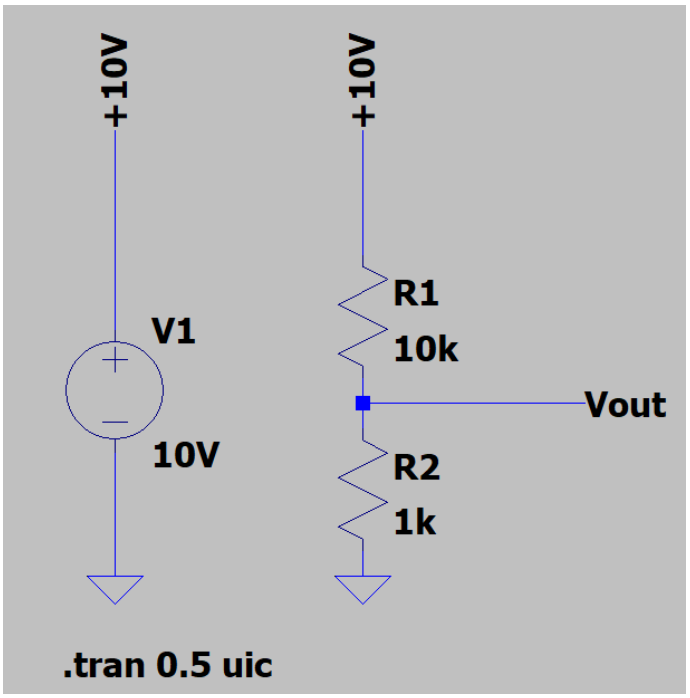

Figure 21: Net Labels

To add these, click on the ***'Label Net'*** button (Fig. 22), and Fig. 23 should occur where you can specify Net names.

Figure 22: Label Net Button

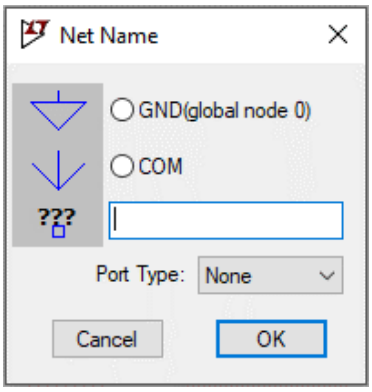

Figure 23: Net Name

Create 2 nets. Label the first ***'+10V'*** and add two of these to the schematic. Once you press OK, the same net can be added to the schematic until you right click. Label the second ***'Vout'***. Add the appropriate connections.

Run the simulation again.

If you look at the voltage graphs now, you should see that the scope traces are actually named ***'+10V'*** and ***'Vout'***.

6. Op-Amp Circuit Simulation

Next let's look at a simple op-amp simulation of an inverting amplifier.

The circuit diagram for the amplifier is shown in Fig. 24 below, whilst the equation explaining its gain is shown in (3).

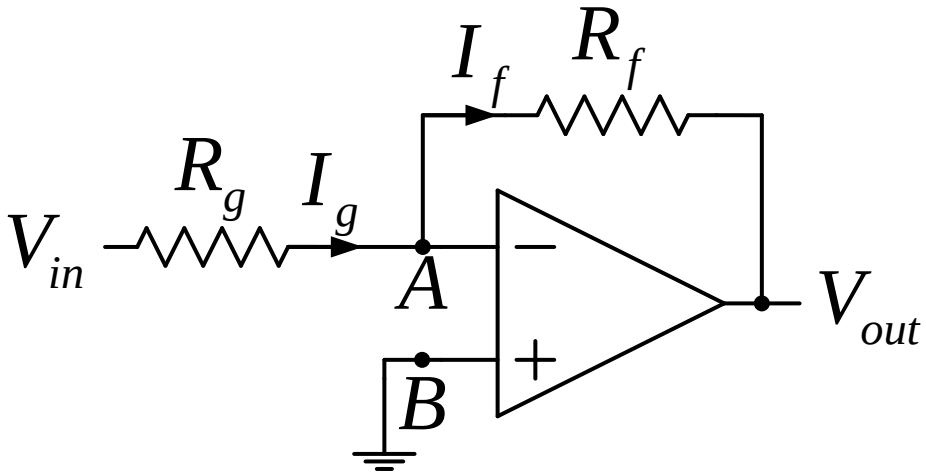

Figure 24: Inverting Amplifier

The closed loop gain of the circuit (A_{CL}) is:

$$\therefore A_{CL} = \frac{V_{out}}{V_{in}} = -\frac{R_f}{R_g} \tag{3}$$

The LTspice implementation looks like Fig. 25.

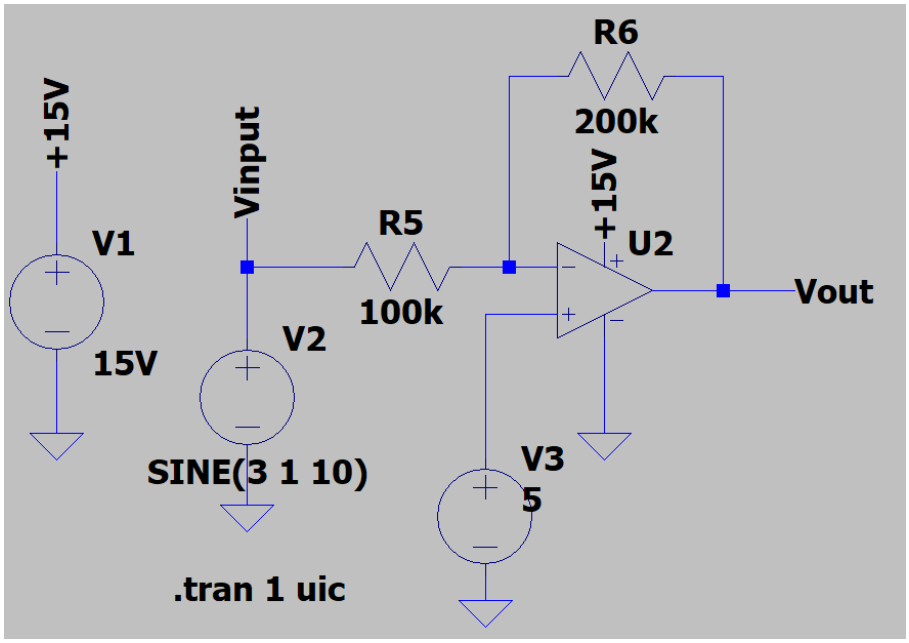

Figure 25: Inverting op-amp Implementation

For this circuit use the ***'UniversalOpAmp2'*** block from the library.

To find this, click on the ***'Component'*** button (logic gate symbol) (Fig. 26).

Figure 26: Component Button

The following block (Fig. 27) should appear. In the search box type ***'UniversalOpAmp2'***, select this and add this to your schematic.

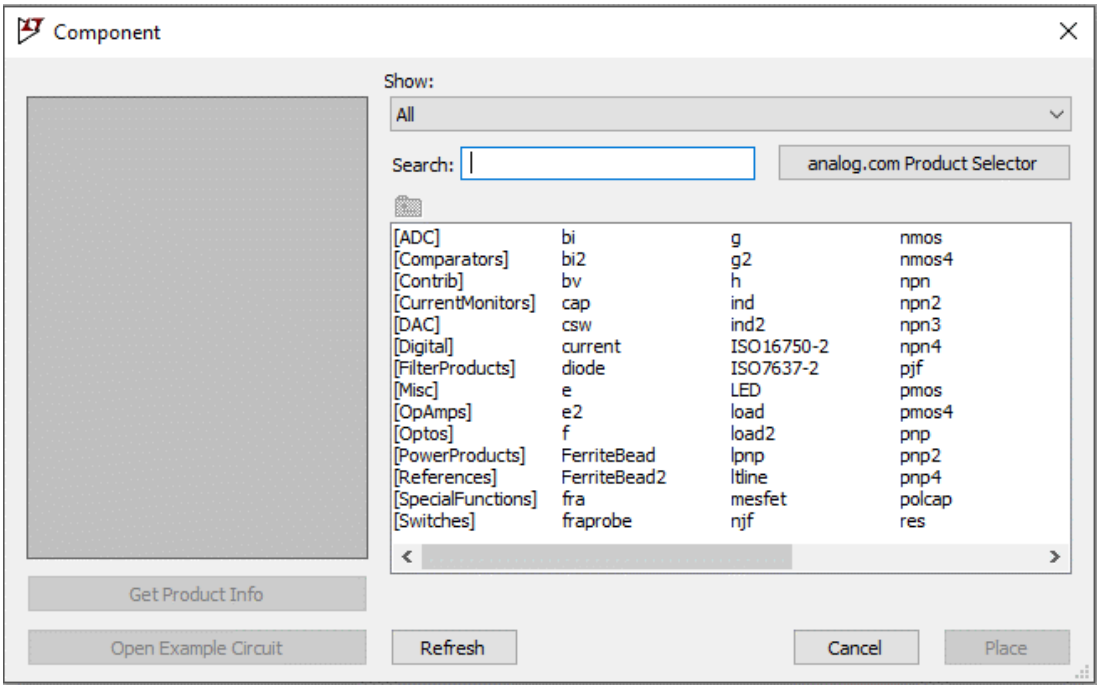

Figure 27: Component Selection

To rotate resistors, use the ***'Rotate'*** and ***'Mirror'*** buttons shown in Fig. 28. These can only be used when you are placing the components.

Figure 28: Rotate and Mirror Buttons

We can set the voltage on ***'V2'*** as a sinusoid. When right clicking on the voltage source, select the advanced option and Fig. 29 will appear.

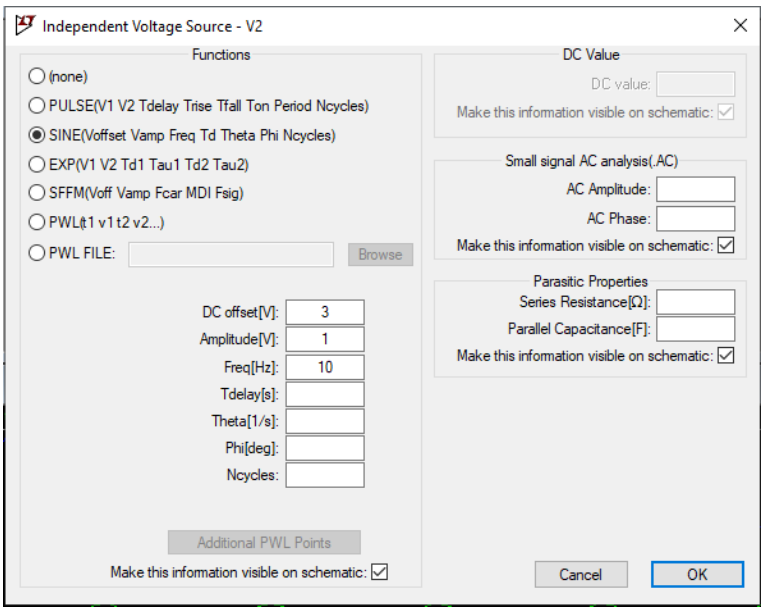

Figure 29: Advanced Voltage Source Options

Choose the ***'SINE'*** function, and set the ***'DC offset'*** to 3V, the ***'Amplitude'*** to 1V, and the ***'Freq'*** to 10 Hz

As the op-amp is only being power from a single supply, a DC offset has to be added to positive input. Here I have set this to 5 V on voltage source ***'V3'***.

If you now run the simulation, the responses shown in Fig. 30 should occur. Do these make sense?

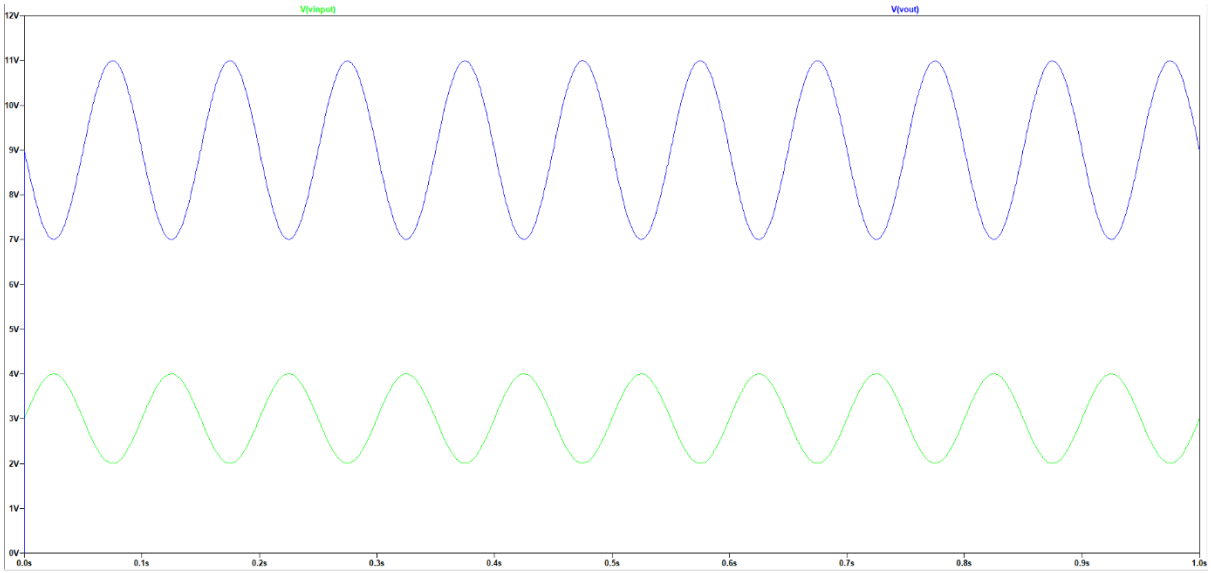

Figure 30: Op-amp Response – Input and Output Voltages

7. Frequency Response

LTspice also allows you to find the frequency response of systems.

If you think about a standard RC Low pass filter, the cutoff or -3dB frequency point can be found using the following equation:

$$f_c = \frac{1}{2\pi RC} \tag{4}$$

We can create a simple RC system as shown in Fig. 31 and we can investigate the filters response using two standard component values. Set the resistance of 1 kΩ, and the capacitance to 47 nF.

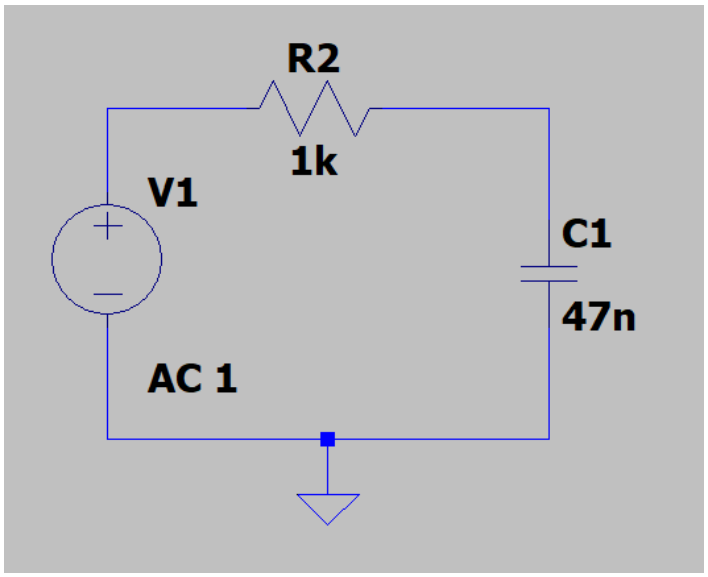

Figure 31: RC Filter Circuit

Using these values we get a cut-off frequency of:

$$f_c = \frac{1}{2\pi \times 1000 \times 47e^{-9}} = 3386.28\ Hz$$

To set up the voltage source to allow the frequency repose to be found we need to undertake an AC analysis.

For the voltage source, instead of setting a DC voltage as in the previous test, you need to select the ***'Advanced'*** button as shown in Fig. 32:

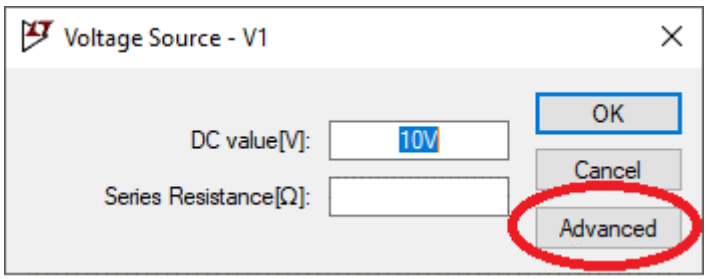

Figure 32: Advanced Voltage Source Button

More Advanced Voltage Source Options should then appears as shown in Fig. 33. Here set the ***'AC Amplitude'*** to ***'1'*** to undertake an AC analysis.

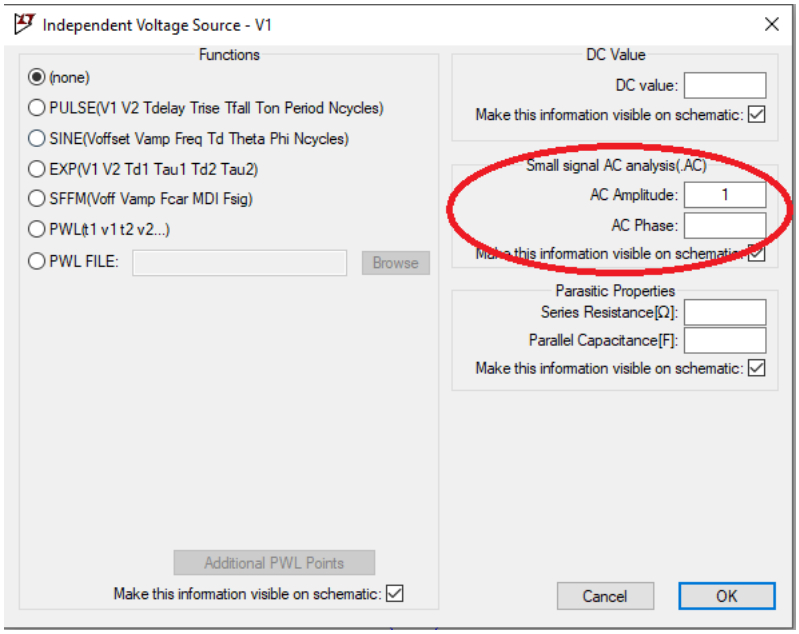

Figure 33: Advanced Voltage Source Options

Once you click OK, ***'AC 1'*** should appear next to your voltage source to show you are undertaking an AC analysis.

To run the AC analysis, select ***'Simulate'*** as shown in Fig. 34 and then ***'Configure Analysis'*** (Fig. 35).

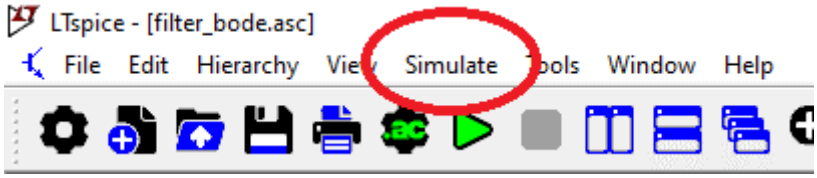

Figure 34: Simulate Button

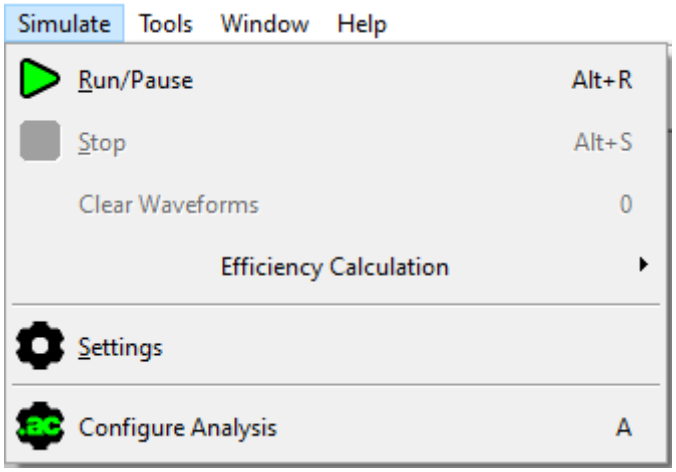

Figure 35: Select Configure Analysis

The ***'Configure Analysis'*** command window should then appear (Fig. 36). Choose ***'Ac Analysis'*** and then input the values as shown in the figure. Note: the start frequency cannot be zero. You can investigate the effect of altering these values on the response obtained.

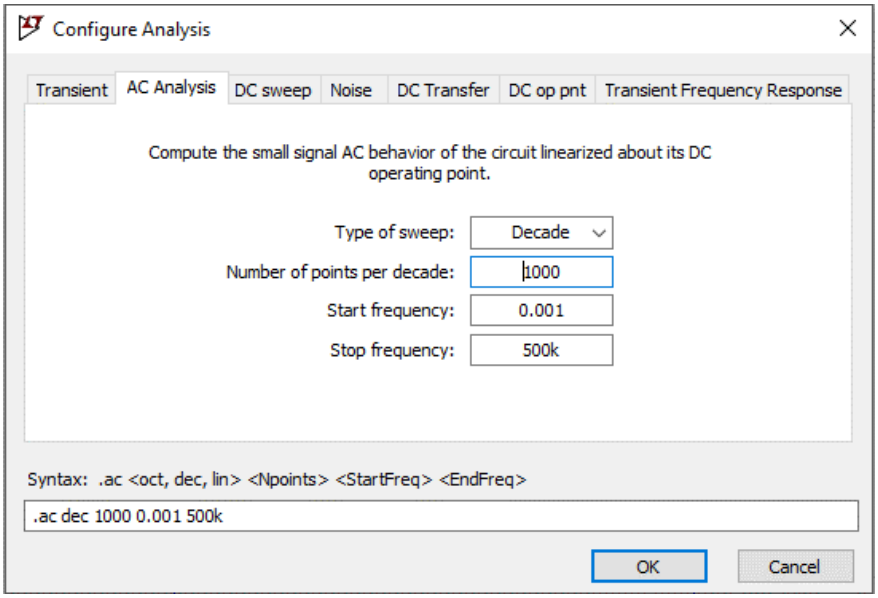

Figure 36: Configure Analysis Options

Once you click OK the following test condition text should appear (Fig. 37).

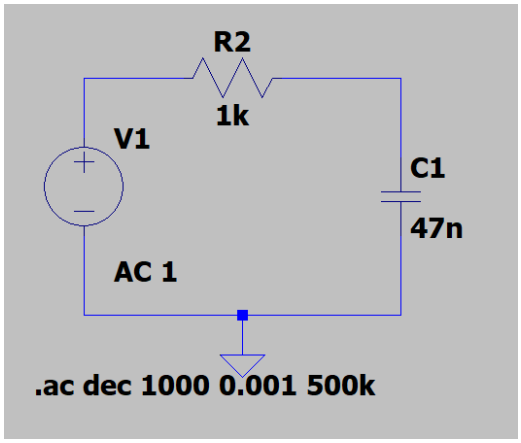

Figure 37: Test Condition Text

If you run the simulation the responses shown in Fig. 38 should appear. Check the -3db frequency obtained and compare it to the calculated value. The solid line is the gain (left hand side axes), and the dotted line is the phase (right hand side axes).

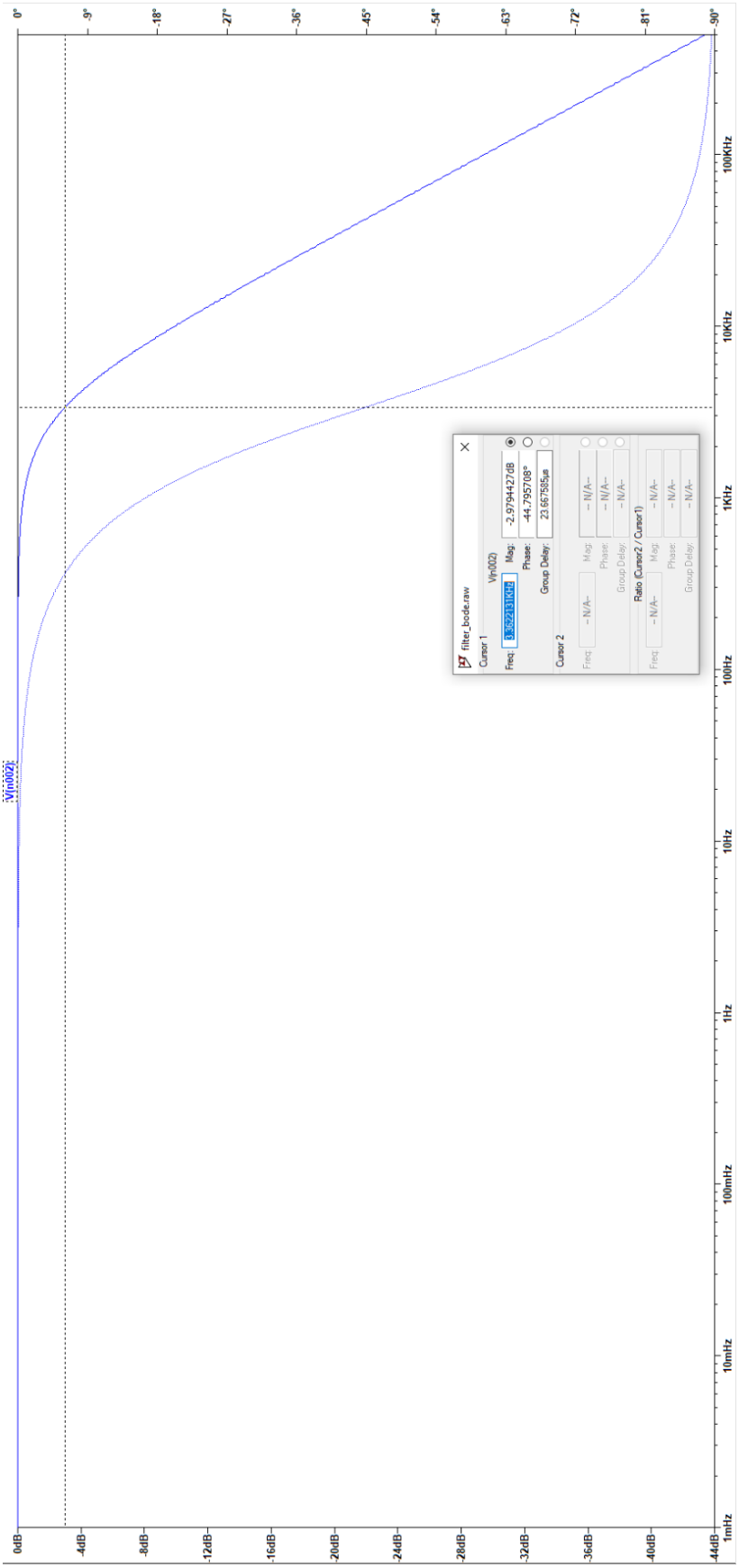

Figure 38: RC Bode Response

Continue investigating LTspice – it is a powerful bit of software which should make your project and the understanding of the circuits a lot easier.